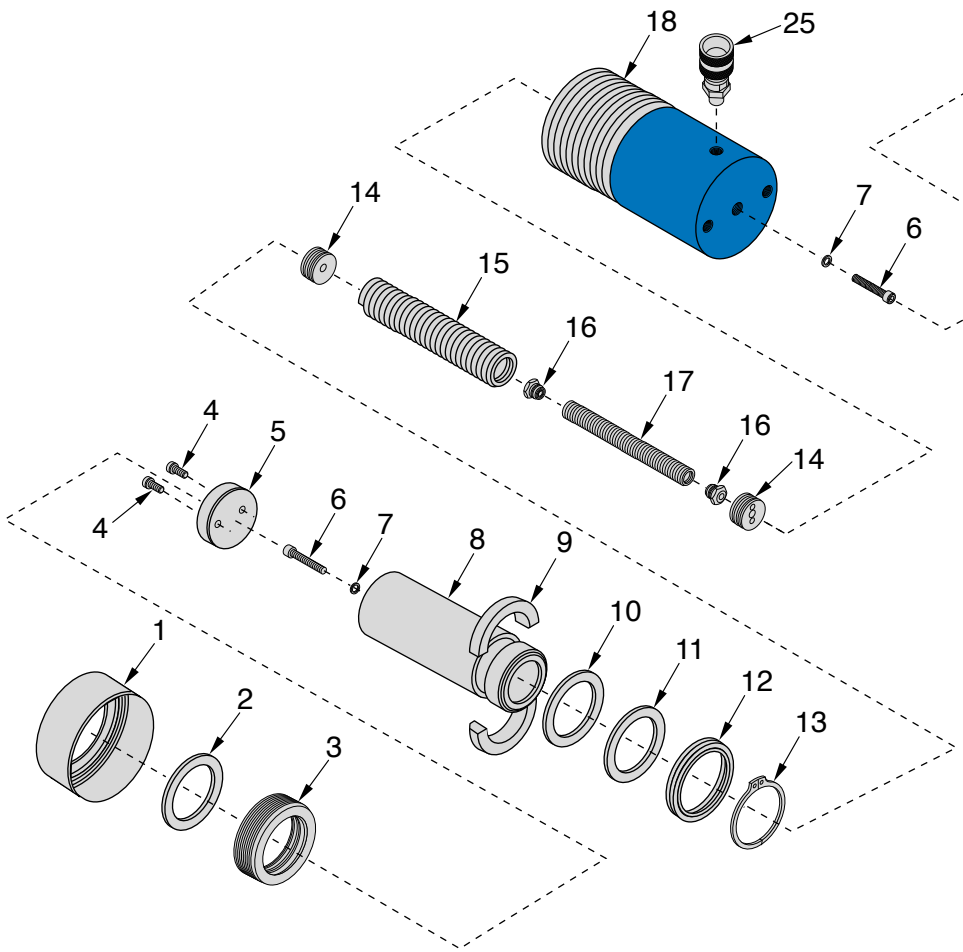

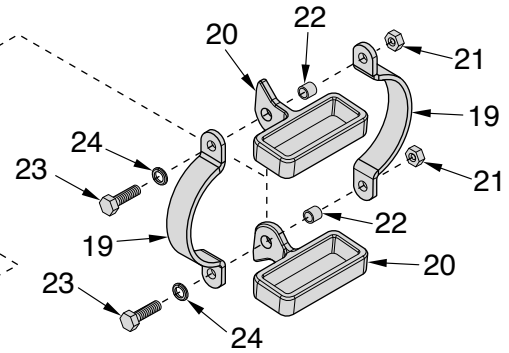

INDEX NO.	DESCRIPTION	PART NO.	QTY.
1	Thread protector	*	1
2	Wiper Seal	*	1
3	Cylinder top nut	*	1
4 5	Saddle assembly	SG75	1
6	Return spring bolt	*	2
7	Return spring bolt washer	*	2
8	Cylinder rod	N/A	1
9	Bearing assembly	*	1
10	Backup washer	*	1
11	Nylon backup washer	*	1
12	U-cup seal	*	1
13	Retaining ring clip	*	1
14	Outer return spring bushing	*	2
15	Outer return spring	*	1
16	Inner return spring bushing	*	2
17	Inner return spring	*	1
18	Cylinder body	N/A	1
19 20 21 22 23 24	Handle assembly	SPI7502	1
25	Female quick coupler	CQ38F	1
*	PARTS: 1, 2, 7 x2, 10, 11, 12, 13	SPK7501	*
*	PARTS: 2, 3, 7 x2, 9	SPK7502	*
*	PARTS: 6 x2, 7 x2, 14 x2, 15, 16 x2, 17	SPK7503	*

MODEL NO.

S756

FREEDOM
INDUSTRIAL HYDRAULICS